9 RFID enabling new solutions

Federico Alimenti, Chiara Mariotti, and Luca Roselli

9.1 Introduction

The short-range wireless transmission of sensor information finds application in several fields ranging from the monitoring of biological parameters in medicine [1–6], to the measurements of mechanical quantities in industrial applications [7–10] and robot guidance [11]. In the last years several technologies have been developed to this purpose, and the emerging one is based on the Radio Frequency IDentification (RFID) concept [12]. This is due to the convergence of several new ideas and approaches like RF energy harvesting [13, 14], RF carrier re-use, the load modulation method, and organic [15–23] and inkjet-printed [24–29] electronics. RF energy harvesting and RF carrier re-use, for example, make possible battery-less (i.e. passive) RFID sensors that can operate for years without any maintenance.

A detailed description of a common RFID system is given in Chapter 2; however, it is worth recalling that it is usually composed of: a reader (or interrogator), that sends an interrogation signal to an RFID tag; a tag (or transponder) which identifies the object with a code, basically implemented by an IC and an antenna; and a host computer that codes and encodes the data from the reader. Moreover, a wireless connection to a global network can be provided [30]. Figure 9.1 shows a block diagram of a typical RFID system, including the tag, the reader, and the host computer connected to a global network.

A classification of the available tag technologies is sketched in Figure 9.2. The passive systems can be divided in two families, namely: chip-based and chipless tags. The first family exploits usually a low-power CMOS chip to implement the main tag functions (RF carrier rectification, DC voltage regulation, ASK demodulation, ID decoding, load modulation, etc.) and thus can be adapted to sensor applications by a few additional circuit blocks (signal conditioning, ADC, etc.). The main advantage of such an approach is the digital modulation of the transmitted signal, and thus the reliability of the data treatment, as shown in [31, 32]. The production costs of chip-based tags are mostly associated with the heterogeneous integration of the silicon chip with the antenna [33, 34], the latter being typically fabricated on a flexible substrate or textile substrate [35–40].

The RFID technology is indeed well consolidated with its main advantages of high flexibility and versatility in terms of the application [41]. Nowadays, however, new functionalities and properties are being pursued following the new paradigm of the

Downloaded from https://www.cambridge.org/core. Columbia University Libraries, on 16 Aug 2017 at 14:01:41, subject to the Cambridge Core terms of use, available at https://www.cambridge.org/core/terms. https://doi.org/10.1017/CBO9781139343459.010

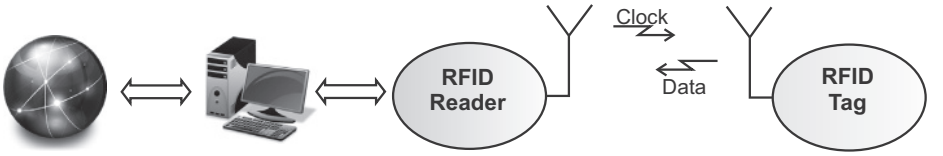

Figure 9.1 A typical RFID system.

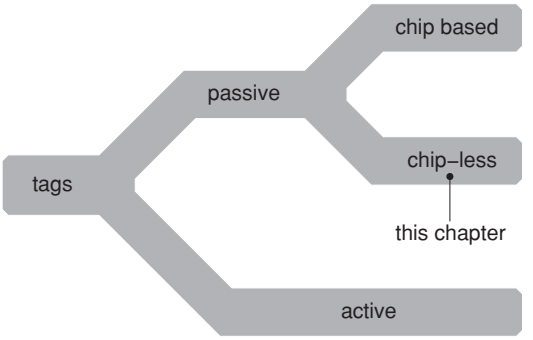

Figure 9.2 Classification of RFID tag technologies.

Internet of Things (IoT), for which the recyclability of the materials, the lower cost of production, and the energy autonomy of the tags are needed. In this context the main weaknesses of the traditional chip-based RFID technologies are the presence of the IC in the tag and the necessity of a connection between the antenna and the IC itself. For these reasons, a technology that exhibits very low cost, high robustness, and the ability to be used in severe environments is very attractive and highly desirable for many applications in the IoT and ubiquitous sensing scenarios [41].

An alternative to the common IC-based RFID technology is the traditional barcode, very cheap because it is simply printed in marks and spaces, but with some disadvantages from the point of view of the IoT scenario: static behavior, no sensing capability nor any kind of "intelligence," LoS operation, short-range readability and so on [42]. Ideally, for the purposes of the IoT applications, one of the best solutions might be mixing the low fabrication costs of barcode-like systems with the long readability range and the information capabilities of RFIDs.

Significant investment and research have been focused on lowering the price of RFID tags by reducing the cost of the RFID IC, which represents the expensive part of the tag itself. However, the price of an RFID tag is still much higher than a barcode, and this is the main reason why RFID technology has not completely replaced the barcode yet and new technologies are being proposed.

Recently, the interest of the scientific community in this field has moved towards the development of the already cited *chipless* RFID tags, thus reducing the fabrication cost by eliminating the IC and keeping at the same time the long-range and non-line-of-sight (N-LoS) readability of the common RFID tags. This is made possible also thanks to some growing technologies such as, for example, nano-particle silver inkjet printing

Downloaded from https://www.cambridge.org/core. Columbia University Libraries, on 16 Aug 2017 at 14:01:41, subject to the Cambridge Core terms of use, available at https://www.cambridge.org/core/terms. https://doi.org/10.1017/CBO9781139343459.010

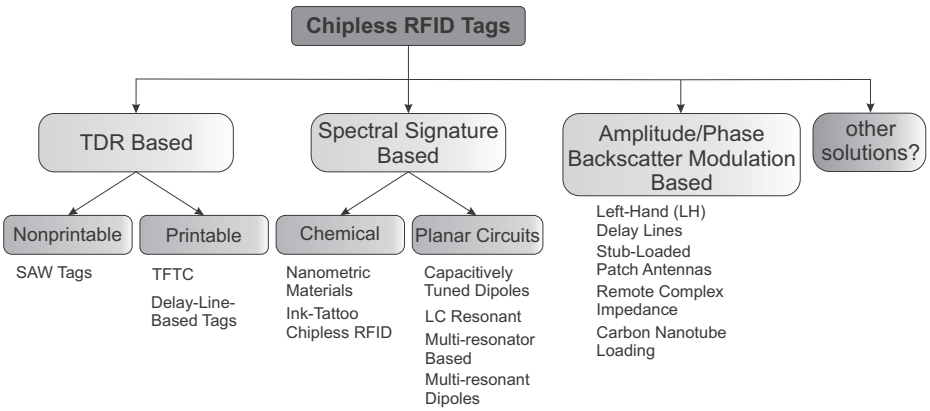

Figure 9.3 Classification of chipless RFID tags.

[24] or copper adhesive laminate techniques [43] on photographic paper or other flexible substrates.

The basic chipless technology simply applies radar principles: the information is embedded into the electromagnetic signature (EMS) of the structure based on the assumption that "every object inherently has a specific EMS that can be associated with an ID" [42], being to this extent an RF evolution of the barcode but without electronics involved.

As of now, one of the most challenging design steps for an RFID chipless tag is to find an optimal method to encode data, possibly in a non-static way, when no IC is present. In order to address this issue, researchers are proposing some different approaches. It is possible to categorize chipless RFID tags as follows (see Figure 9.3):

- time-domain reflectometry (TDR)-based chipless tags;
- spectral signature-based chipless tags;
- amplitude/phase backscatter modulation-based chipless tags;
- other solutions?

9.2 Time-domain reflectometry (TDR)-based chipless tags

In time-domain reflectometry (TDR)-based chipless RFIDs, the reader interrogates the tags by sending a pulse and listening to the echoes reflected by them. The time of arrival of the echoes is used to encode the data. TDR-based chipless tags are low cost and have higher reading ranges compared to other chipless tags, however, the number of encodable bits is low and the reader is complex. TDR-based chipless tags can be nonprintable, such as surface acoustic wave (SAW) tags, or printable, such as for instance, thin film transistor circuit (TFTC)-based tags, or delay-line-based tags. In the SAW-based circuit architecture tag, illustrated with an example in Figure 9.4(a), the interrogation pulse is received by the antenna and then converted to an SAW by means of an interdigital

Downloaded from https://www.cambridge.org/core. Columbia University Libraries, on 16 Aug 2017 at 14:01:41, subject to the Cambridge Core terms of use, available at https://www.cambridge.org/core/terms. https://doi.org/10.1017/CBO9781139343459.010

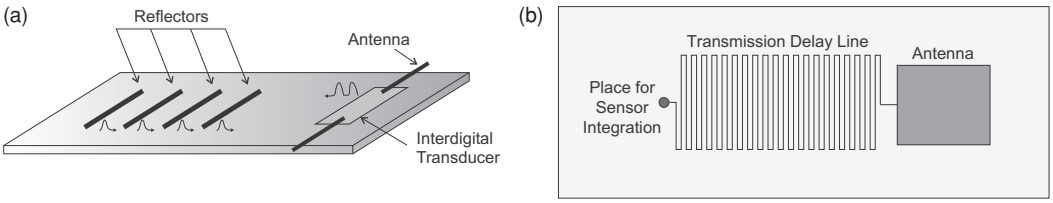

Figure 9.4 Examples of TDR-based chipless tags architecture: (a) The SAW-based tag (nonprintable); (b) The delay-line-based tag (printable).

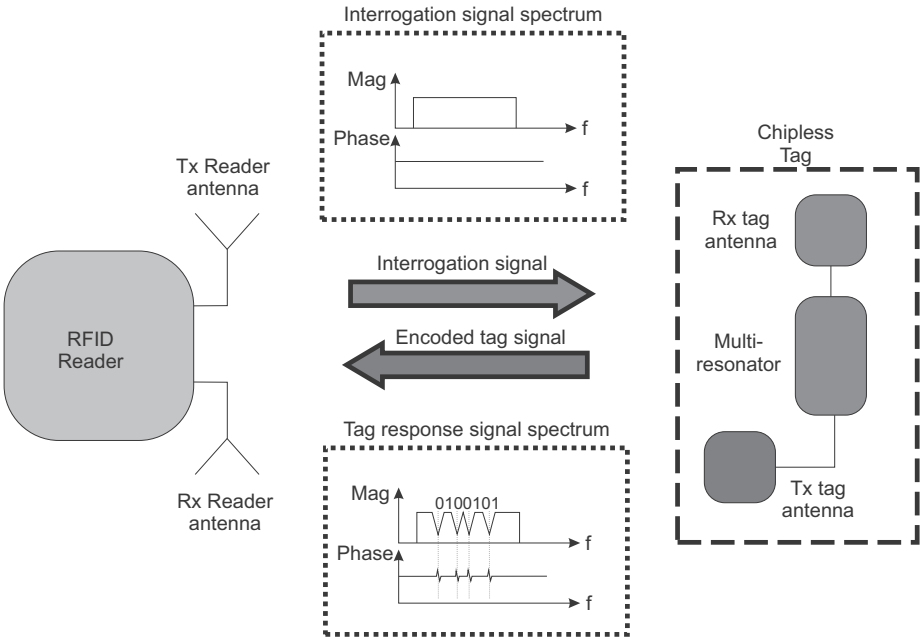

Figure 9.5 Spectral signature-based chipless tag operating principle.

transducer. The SAW propagates to a number of reflectors, which create a number of echoes with phase shift [42].

In contrast, Figure 9.4(b) shows an example of delay-line-based chipless tag architecture, in which there is a receiving antenna and a transmission delay line that reflects at various points (discontinuities) the received pulse, creating its multiple echoes and thus encoding the information. This type of tag replicates the operating principle of SAW-based chipless tags using microstrip technology, making it fully printable.

9.3 Spectral signature-based chipless tags

Spectral signature-based chipless tags work by encoding the data into the spectrum by means of resonant structures. Figure 9.5 shows the operating principle of this type of

Downloaded from https://www.cambridge.org/core. Columbia University Libraries, on 16 Aug 2017 at 14:01:41, subject to the Cambridge Core terms of use, available at https://www.cambridge.org/core/terms. https://doi.org/10.1017/CBO9781139343459.010

chipless tag: the reader sends an UWB signal, received by the Rx antenna of the tag; the tag encodes the information using a multi-resonating structure that substantially filters some frequencies of the original spectrum. The encoded spectrum is then sent back to the interrogator through the tag transmitting antenna. This spectrum is usually encoded assuming that the filtered frequencies represent the "0" and the not filtered the "1."

The advantages of this approach are that the tags are fully printable and the data storage capability is higher compared to other chipless tags, the number of bits being, in principle, equal to the number of resonators. However, a large spectrum is needed for data encoding and, on the reader side, wideband dedicated RF components are thus required.

Signal-based chipless tags can also be classified as follows: chemical, such as ink-tattoo chipless RFID [44] or nanometric materials-based [45]; and planar circuits (for example: capacitively tuned dipoles [46], LC resonant circuits [47], multi-resonator-based [48], multi-resonant dipoles-based [49]).

9.4 Amplitude/phase backscatter modulation-based chipless tags

In amplitude/phase backscatter modulation-based chipless tags, the data encoding is achieved by changing the amplitude or the phase of the backscattered signal through the variation of the tag antenna loading. This variation is usually due to the presence, as a load on the antenna, of a material which modifies its impedance according to the change of the information to transmit. The reader then encodes the information based on the variation of the amplitude/phase of the backscattered signal.

An example of this type of chipless tag is the one reported in [50], consisting of an on-photographic-paper-inkjet-printed antenna working at 868 MHz and loaded by a single wall carbon nanotube (SWCNT), sensitive to the gas variation in the neighboring atmosphere. Some measurements have proved that the impedance of the SWCNT is modified when a certain quantity of ammonia is introduced in the air, thus varying the antenna load and as a consequence the backscattered signal. The interrogator is then able to detect the presence of the ammonia.

There are other types of amplitude/phase backscatter modulation-based chipless tags, such as left-hand delay-lines-based [51], stub-loaded patch antenna-based [52], and remote complex impedance-based [53].

In general, the advantages of these chipless tags are that they operate over narrow bandwidths and the architecture is simple; the disadvantages are that they can detect a lower number of bits compared to other chipless tags and that the encoding might be performed by means of lumped/chipped elements, thus increasing the tags' fabrication costs.

9.5 Other solutions?

In the already described scenario for chipless tags, there is still space for novel solutions. In the following sections an innovative approach, recently proposed, to solve the issue

Downloaded from https://www.cambridge.org/core. Columbia University Libraries, on 16 Aug 2017 at 14:01:41, subject to the Cambridge Core terms of use, available at https://www.cambridge.org/core/terms. https://doi.org/10.1017/CBO9781139343459.010

of the absolute accuracy required by most of the passive chipless RFID sensors is illustrated. To this purpose the sensor information is encoded as the phase difference between two signals, acting as the reference signal to each other. First the tag receives a carrier at frequency f_0. Then two equal signals at frequency $2\,f_0$ are generated by means of a diode-based frequency doubler and a power divider. At this point one of the two signals is phase-shifted using a passive sensing element. Finally the $2\,f_0$ signals are re-radiated by exploiting two orthogonally polarized antennas. With this approach the sensor information can be extracted by a suitable reader equipped with two complex (I/Q) receivers. The above tag concept is compatible with paper substrate and inkjet printing technology since antennas [54], diodes [55], and passive sensing elements [56–59], i.e. all the main tag components, will soon be available on paper material. In addition, substrate integrated waveguide (SIW) structures [60], a way to implement standard waveguide geometries [61] exploiting planar processes and dielectric substrates, will be soon available on paper. As a consequence, a further cost reduction of standard PCB technologies [62] could be directly achieved.

The remaining part of this chapter is organized as follows. The sensor architecture is described in Section 9.6, where both tag and reader subsystems are considered. Then, Section 9.7 illustrates the theory of operation and the basic equations needed to recover the information. Finally, possible applications of the developed theory are proposed in Section 9.8 for four significant cases.

9.6 Novel RFID sensor

The proposed RFID sensor [63] is based on the harmonic radar concept [64], i.e. on a tag that, being illuminated by a carrier at frequency f_0, is capable of generating the second harmonic $2\,f_0$. Such a tag, however, is also responsible for the sensor information encoding, as shown in Figure 9.6.

To describe the tag operation, let us consider the signal flow shown in the same figure. The incoming electromagnetic wave at frequency f_0 is received by a spiral or a helical antenna [65]. In this way the power at the antenna output is maximized regardless of the polarization or the relative reader–tag orientation. The received power is then fed into a varactor or a Schottky diode frequency doubler [66] and the second harmonic is generated. At this point the $2\,f_0$ signal is split by a power divider. The first part is directly re-radiated in vertical polarization (e.g. E_η in Figure 9.6) in such a way as to form a reference signal component. The second part, instead, is phase-shifted by the angle $\Delta\varphi$ and then re-radiated in horizontal polarization (e.g. E_ξ in Figure 9.6). Phase-shifters based on the concept proposed in [67] could, for example, be used to this purpose.

The phase angle $\Delta\varphi$ encodes the sensor information and must be recovered by the reader. To this purpose the reader is composed of four sub-systems, as depicted in Figure 9.7. A phase-locked loop (PLL) oscillator is used to generate both the f_0 and the $2\,f_0$ signals in a synchronous way.

The f_0 carrier is managed by the transmitter (TX) and serves to remotely illuminate the tag. The transmitter operates in continuous wave (CW) mode or by exploiting a

Downloaded from https://www.cambridge.org/core. Columbia University Libraries, on 16 Aug 2017 at 14:01:41, subject to the Cambridge Core terms of use, available at https://www.cambridge.org/core/terms. https://doi.org/10.1017/CBO9781139343459.010

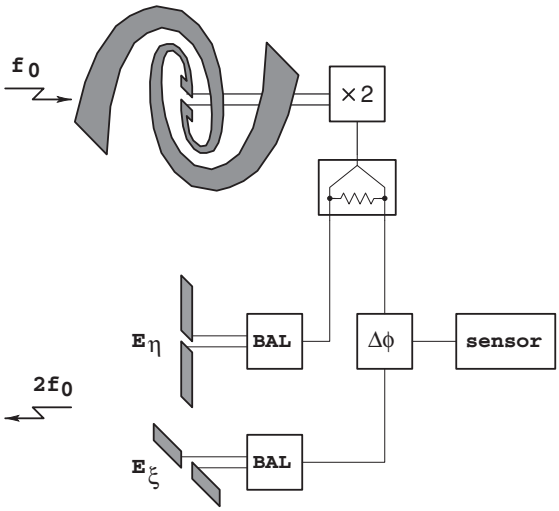

Figure 9.6 Harmonic tag block diagram (after [63]).

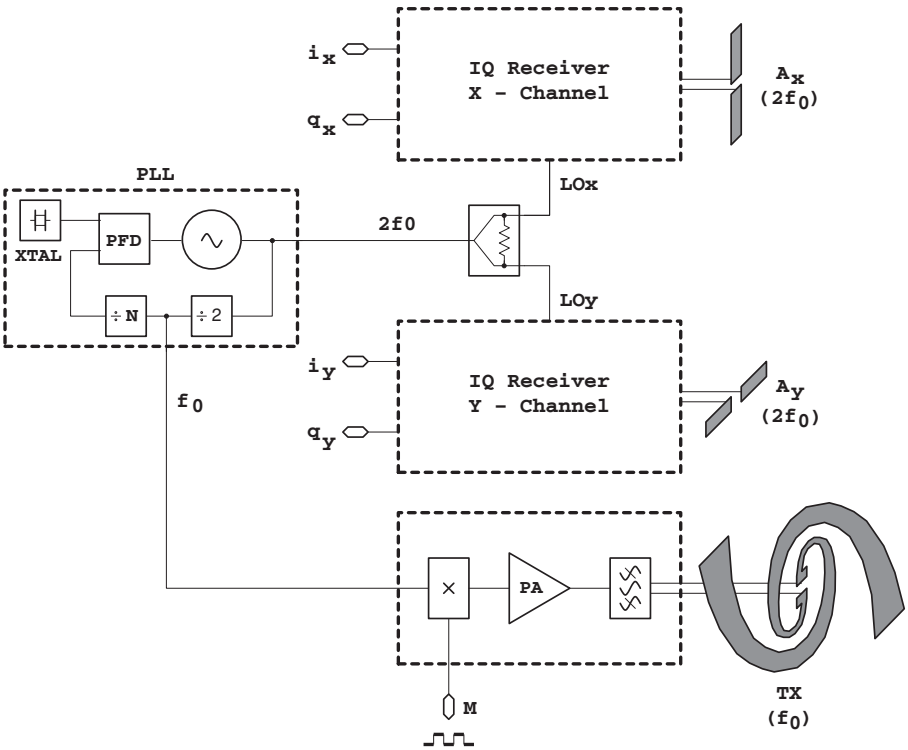

Figure 9.7 Reader block diagram (after [63]).

Downloaded from https://www.cambridge.org/core. Columbia University Libraries, on 16 Aug 2017 at 14:01:41, subject to the Cambridge Core terms of use, available at https://www.cambridge.org/core/terms. https://doi.org/10.1017/CBO9781139343459.010

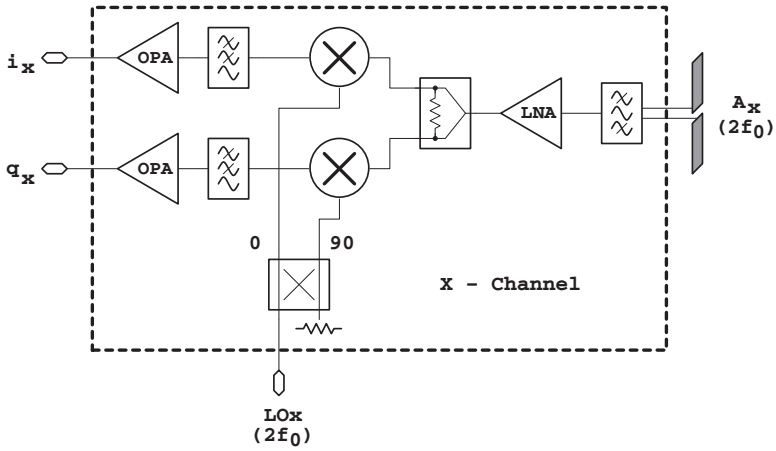

Figure 9.8 IQ receiver (x-channel) block diagram (after [63]).

modulated carrier (see M input in Figure 9.7). It is composed of a modulator and a power amplifier, the latter followed by a band-pass filter at f_0 (or a stop-band filter at $2f_0$). The filter is necessary to significantly reduce the second harmonic generated by the power amplifier, thus eliminating the risk of blinding the receiver. The second harmonic of the TX, in fact, should be kept below the noise floor of the receiver.

The transmitting antenna is again of spiral or helical type in order to maximize the illumination power regardless of the orientation.

The $2f_0$ component, instead, is used as the local oscillator of the receiver. Such a signal is thus divided into two parts and applied to both the x- and y-receiver channels. Each channel is sensitive to a particular wave polarization, achieved by exploiting dipole antennas. In particular, the x-channel is adapted to receive the vertical polarization signal while the y-channel is exploited for the horizontally polarized one. Because the sensor information is encoded as phase difference $\Delta\varphi$ between the two polarizations, a vector receiver is needed for each channel. This vector receiver is based on a zero-IF in-phase and quadrature (IQ) architecture, as illustrated in Figure 9.8.

9.7 Basic theory

This section is devoted to the operation theory of the novel RFID sensor system. First, the detection of the two orthogonal $2f_0$ plane waves is considered. These waves are generated and radiated by the tag and thus the relevant phase and amplitude information associated with them is recovered by the reader. The illumination of the tag with a carrier at f_0, the second harmonic generation, and the phase information coding are also treated in this section.

The theory will be developed under the basic assumption of a tag antenna plane parallel to the reader antenna plane. In addition, without lack of generality, the two antenna systems will be considered axially aligned along the propagation direction.

Downloaded from https://www.cambridge.org/core. Columbia University Libraries, on 16 Aug 2017 at 14:01:41, subject to the Cambridge Core terms of use, available at https://www.cambridge.org/core/terms. https://doi.org/10.1017/CBO9781139343459.010

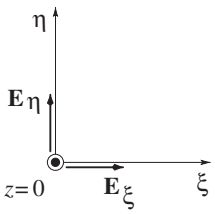

Figure 9.9 Coordinate system adopted in the tag plane (i.e. $\xi-\eta$ plane) and $2f_0$ electric field components. These electric fields are radiated by the two equal orthogonal tag antennas after [63].

This hypothesis is satisfied in many industrial applications, such as the contact-less measurement of mechanical quantities in rotating systems like engines and turbines [68] or monitoring of objects above a conveyor belt in a distribution chain. In the latter case the tag is assumed to be interrogated when it is exactly perpendicular to the reader.

9.7.1 Tag information encoding

The proposed RFID sensor relies on the phase and amplitude information written on two orthogonally polarized plane waves at frequency $2f_0$. These waves are fully determined by a knowledge of the associated electric field vectors as in Figure 9.9. In particular, the $\xi-\eta$ coordinate system is used in the tag plane while the two electric fields E_ξ and E_η are radiated by two equal antennas, linearly polarized along ξ and η respectively.

Adopting the complex vector formalism one can write:

$$\begin{aligned}\mathrm{E}_\xi &= E_\xi \mathrm{e}^{\mathrm{j}\varphi_\xi}\mathrm{u}_\xi,\\ \mathrm{E}_\eta &= E_\eta \mathrm{e}^{\mathrm{j}\varphi_\eta}\mathrm{u}_\eta,\end{aligned} \tag{9.1}$$

where E_k, φ_k, and u_k, with $k=\xi,\eta$, are the electric field amplitudes, the electric field phases and the unit vectors respectively. In particular the amplitudes E_k will be assumed real and positive having concentrated all the phase relationships between the two fields in the φ_k values.

As a consequence of Equation (9.1) the total electric field E_T, radiated by the tag at $2f_0$, is given by:

$$\begin{aligned}\mathrm{E}_T &= \mathrm{E}_\xi + \mathrm{E}_\eta\\ &= E_\xi \mathrm{e}^{\mathrm{j}\varphi_\xi}\left[\mathrm{u}_\xi + \frac{E_\eta}{E_\xi}\mathrm{e}^{\mathrm{j}\varphi_\eta}\mathrm{u}_\eta\right],\end{aligned} \tag{9.2}$$

with $\mathrm{E}_\xi = 0$ and $\Delta\varphi$ being the phase difference between the two fields:

$$\Delta\varphi = \varphi_\eta - \varphi_\xi. \tag{9.3}$$

It is worth noting that (9.2) is the general expression for an elliptical polarized plane wave. As particular cases both purely linear ($\Delta\varphi = 0,\ \pi$) and purely circular ($\mathrm{E}_\eta/\mathrm{E}_\xi = 1$ and $\Delta\varphi = \pm\pi/2$) polarizations are allowed. This means that the relevant tag information can be encoded either in the phase difference $\Delta\varphi$ or in the amplitude ratio $\mathrm{E}_\eta/\mathrm{E}_\xi$.

Downloaded from https://www.cambridge.org/core. Columbia University Libraries, on 16 Aug 2017 at 14:01:41, subject to the Cambridge Core terms of use, available at https://www.cambridge.org/core/terms. https://doi.org/10.1017/CBO9781139343459.010

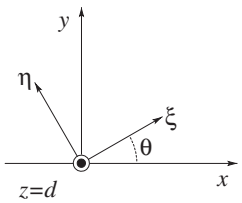

Figure 9.10 Coordinate system adopted in the reader plane (i.e. $x-y$ plane). The reader plane is parallel to the tag plane. The tag $\xi-\eta$ coordinate system is rotated by an angle ϑ with respect to the reader $x-y$ coordinate system. The distance between reader and tag is equal to d (after [63]).

9.7.2 Received reader voltages

Let us now consider a reader placed at a distance d from the tag. The reader exploits two equal linear polarized antennas in orthogonal directions to detect the elliptical polarized wave generated by the tag. This situation is summarized in Figure 9.10, where the reader antenna plane has been assumed parallel to the tag antenna plane. In this scheme the two reader antennas are placed along the x- and the y-axis. Moreover, an angle ϑ is formed between ξ- and x-axis. Such an angle will be, in general, not known since it depends on the way the tag is attached to the object to be monitored.

As a final assumption, let us consider the case when the reader and the tag antenna systems are perfectly aligned along a common z-axis. In this case the electric field at the reader location E_R is simply given by the tag field E_T multiplied for the transfer function of the channel:

$$\mathrm{E}_R = \alpha \mathrm{e}^{-\mathrm{j}\beta d}\mathrm{E}_T, \tag{9.4}$$

where α is the path loss, β is the propagation constant, and d is the reader–tag distance. If a free-space radiation model can be applied to the considered problem, α and β are:

$$\begin{aligned} \alpha &= \frac{\lambda}{4\pi d}\sqrt{D_R D_T}, \\ \beta &= \frac{2\pi}{\lambda}. \end{aligned} \tag{9.5}$$

In (9.5) the wavelength λ is evaluated at $2\,f_0$, and D_R and D_T are the reader and the tag antenna directivity, respectively. The electric field at the reader location E_R can then be projected along the x-oriented receiver antenna:

$$\begin{aligned} E_x &= \mathrm{E}_R \cdot \mathrm{u}_x \\ &= E_0 \left[\mathrm{u}_\xi \cdot \mathrm{u}_x + \frac{E_\eta}{E_\xi}\mathrm{e}^{\mathrm{j}\Delta\varphi}\mathrm{u}_\eta \cdot \mathrm{u}_x \right]. \end{aligned} \tag{9.6}$$

Similarly, for the y-oriented receiver antenna one gets:

$$\begin{aligned} E_y &= \mathrm{E}_R \cdot \mathrm{u}_y \\ &= E_0 \left[\mathrm{u}_\xi \cdot \mathrm{u}_y + \frac{E_\eta}{E_\xi}\mathrm{e}^{\mathrm{j}\Delta\varphi}\mathrm{u}_\eta \cdot \mathrm{u}_y \right]. \end{aligned} \tag{9.7}$$

Downloaded from https://www.cambridge.org/core. Columbia University Libraries, on 16 Aug 2017 at 14:01:41, subject to the Cambridge Core terms of use, available at https://www.cambridge.org/core/terms. https://doi.org/10.1017/CBO9781139343459.010

In (9.6) and (9.7) the phasor E_0 is defined as:

$$E_0 = \alpha e^{j(\varphi_\xi - \beta d)} E_\xi. \tag{9.8}$$

Considering that the projections of the ξ and η unity vectors along the x and y directions are given by:

$$\begin{aligned} u_\xi \cdot u_x &= \cos\vartheta, \\ u_\eta \cdot u_x &= -\sin\vartheta, \\ u_\xi \cdot u_y &= \sin\vartheta, \\ u_\eta \cdot u_y &= \cos\vartheta, \end{aligned} \tag{9.9}$$

one obtains:

$$E_x = E_0 \left[\cos\vartheta - \frac{E_\eta}{E_\xi} e^{j\Delta\varphi} \sin\vartheta \right], \tag{9.10}$$

$$E_y = E_0 \left[\sin\vartheta + \frac{E_\eta}{E_\xi} e^{j\Delta\varphi} \cos\vartheta \right]. \tag{9.11}$$

The E_x and E_y fields can be finally related to the received voltages processed by the reader's two channels. To this purpose one can exploit the effective antenna length l_e as defined in [69, p. 305]. The input received voltages are:

$$V_k^i = l_e E_k, \tag{9.12}$$

where $k = x, y$ and the index i stands for input. If, for example, a half-wave dipole antenna is considered, the maximum l_e is:

$$l_e = \frac{\lambda}{\pi}, \tag{9.13}$$

which is smaller than $\lambda/2$ due to the sinusoidal distribution of the current along the dipole itself. Inserting Equations (9.10) and (9.11) into (9.12) and using the Euler's formula to express $e^{j\Delta\varphi}$ one gets:

$$V_x^i = l_e E_0 (A_x + jB_x), \tag{9.14}$$

$$V_y^i = l_e E_0 (A_y + jB_y), \tag{9.15}$$

where the A and B quantities contain all the relevant tag information, i.e. $\Delta\varphi$, E_η/E_ξ, and ϑ:

$$\begin{aligned} A_x &= \cos\vartheta - \frac{E_\eta}{E_\xi} \cos\Delta\varphi \sin\vartheta, \\ A_y &= \sin\vartheta + \frac{E_\eta}{E_\xi} \cos\Delta\varphi \cos\vartheta, \end{aligned} \tag{9.16}$$

$$\begin{aligned} B_x &= -\frac{E_\eta}{E_\xi} \sin\Delta\varphi \sin\vartheta, \\ B_y &= \frac{E_\eta}{E_\xi} \sin\Delta\varphi \cos\vartheta. \end{aligned} \tag{9.17}$$

Downloaded from https://www.cambridge.org/core. Columbia University Libraries, on 16 Aug 2017 at 14:01:41, subject to the Cambridge Core terms of use, available at https://www.cambridge.org/core/terms. https://doi.org/10.1017/CBO9781139343459.010

The time-domain signals are easily obtained from the phasors in (9.14), (9.15), and considering the expression for E_0 quoted in (9.8). The x-channel input voltage is given by:

$$\begin{aligned} v_x^i(t) &= \Re\{V_x^i \mathrm{e}^{\mathrm{j}2\omega_0 t}\} \\ &= V_0 \Re\{(A_x + \mathrm{j}B_x)\mathrm{e}^{\mathrm{j}(2\omega_0 t + \varphi_\xi - \beta d)}\} \\ &= V_0[A_x \cos(2\omega_0 t + \varphi_\xi - \beta d) - B_x \sin(2\omega_0 t + \varphi_\xi - \beta d)], \end{aligned} \tag{9.18}$$

where V_0 is the amplitude of the input referred voltage:

$$V_0 = l_e\,|E_0| = \alpha l_e E_\xi. \tag{9.19}$$

Similarly, the y-channel input voltage can be written as:

$$v_y^i(t) = V_0[A_y \cos(2\omega_0 t + \varphi_\xi - \beta d) - B_y \sin(2\omega_0 t + \varphi_\xi - \beta d)]. \tag{9.20}$$

9.7.3 Conversion products

Once the time-domain expressions have been obtained, it is quite straightforward to derive the conversion products and, from them, the in-phase $i(t)$ and quadrature $q(t)$ output signal components. For the x-channel one obtains:

$$\begin{aligned} i_x(t) &= \mathrm{LPF}\{2G_v^{rx} v_x^i(t)\cos(2\omega_0 t - \psi)\} \\ &= G_v^{rx} V_0(A_x \cos\psi_R - B_x \sin\psi_R), \end{aligned} \tag{9.21}$$

$$\begin{aligned} q_x(t) &= \mathrm{LPF}\{-2G_v^{rx} v_x^i(t)\sin(2\omega_0 t - \psi)\} \\ &= G_v^{rx} V_0(A_x \sin\psi_R + B_x \cos\psi_R), \end{aligned} \tag{9.22}$$

where G_v^{rx} is the overall receiver gain, ψ is the local oscillator phase, and LPF $\{\}$ is the low-pass operator that rejects the $4\omega_0$ mixing product. The quantity ψ_R is defined as:

$$\psi_R = \psi + \varphi_\xi - \beta d. \tag{9.23}$$

Similarly, the y-channel outputs are:

$$i_y(t) = G_v^{rx} V_0(A_y \cos\psi_R - B_y \sin\psi_R), \tag{9.24}$$

$$q_y(t) = G_v^{rx} V_0(A_y \sin\psi_R + B_y \cos\psi_R). \tag{9.25}$$

In the case of a modulated carrier (signal injected at the M input in Figure 9.7), Equations (9.21)–(9.25) represent the amplitude of the base-band signal at the receiver output. As a final observation it is worth noting that the same receiver gain G_v^{rx} and local oscillator phase ψ have been assumed for both the x and the y readers' channels. In practice this condition can be met by calibrating the two receivers with a set of preliminary measurements.

9.7.4 Information recovery

The relationships (9.21), (9.22) and (9.24), (9.25) constitute a set of four equations that can be written at each time instant. The known terms are given by the in-phase and

Downloaded from https://www.cambridge.org/core. Columbia University Libraries, on 16 Aug 2017 at 14:01:41, subject to the Cambridge Core terms of use, available at https://www.cambridge.org/core/terms. https://doi.org/10.1017/CBO9781139343459.010

quadrature signals at the output of the two readers' channels, i.e. by measurable values. The unknowns are the received amplitude V_0, the overall received phase ψ_R, and the tag quantities, namely ϑ, $\Delta\varphi$, and E_η/E_ξ. As a result five unknowns are obtained, this means that additional knowledge of the system is needed. For example, if the tag is designed to have a specific E_η/E_ξ ratio, all the information is encoded within $\Delta\varphi$.

In order to eliminate V_0 and ψ_R from the above system of equations the following ratio is computed at each time instant:

$$U = U_R + \mathrm{j}U_I = \frac{i_x + \mathrm{j}q_x}{i_y + \mathrm{j}q_y}. \tag{9.26}$$

Developing the above expression one obtains:

$$\begin{aligned} U_R &= \frac{i_x i_y + q_x q_y}{i_y^2 + q_y^2} \\ &= \frac{A_x A_y + B_x B_y}{A_y^2 + B_y^2}, \end{aligned} \tag{9.27}$$

$$\begin{aligned} U_I &= \frac{q_x i_y - i_x q_y}{i_y^2 + q_y^2} \\ &= \frac{B_x A_y - A_x B_y}{A_y^2 + B_y^2}. \end{aligned} \tag{9.28}$$

The U_R and U_I values can be directly evaluated from the measured output voltages (known terms), whereas the tag unknowns are within the A and B quantities. The relationship between U_R, U_I, and these unknowns can be found by inserting Equations (9.16), (9.17) into (9.27), (9.28). After some manipulation one obtains:

$$U_R = \frac{1}{D_u}\left\{\left[1 - \left(\frac{E_\eta}{E_\xi}\right)^2\right]\cos\vartheta\sin\vartheta + \frac{E_\eta}{E_\xi}\cos\Delta\varphi(\cos^2\vartheta - \sin^2\vartheta)\right\}, \tag{9.29}$$

$$U_I = -\frac{1}{D_u}\frac{E_\eta}{E_\xi}\sin\Delta\varphi, \tag{9.30}$$

where the denominator D_u is given by:

$$D_u = \sin^2\vartheta + \left(\frac{E_\eta}{E_\xi}\right)^2\cos^2\vartheta + 2\frac{E_\eta}{E_\xi}\cos\vartheta\sin\vartheta\cos\Delta\varphi. \tag{9.31}$$

9.8 Applications

Possible applications of the above general theory are analyzed below in a number of particular cases of practical interest. The first case is that of a tag with fixed (an *a-priori* known) orientation angle ϑ in which the information is encoded by the amplitude only. This assumption means that $\Delta\varphi$ is constant, whereas $\rho = E_\eta/E_\xi$ is varied according to the physical quantity to be measured. If $\vartheta = 0$ and $\Delta\varphi = 0$, Equations (9.27) and (9.28)

Downloaded from https://www.cambridge.org/core. Columbia University Libraries, on 16 Aug 2017 at 14:01:41, subject to the Cambridge Core terms of use, available at https://www.cambridge.org/core/terms. https://doi.org/10.1017/CBO9781139343459.010

reduce to:

$$U_R = \frac{E_\xi}{E_\eta}, \tag{9.32}$$

$$U_I = 0. \tag{9.33}$$

As a consequence the information can immediately be derived using U_R, thus identifying a very simple method of zero-power wireless transmission of sensor data.

In the second case the tag again has a fixed orientation angle $\theta = 0$, but the information is encoded as a variation of the phase angle $\Delta\varphi$ only. Here an unit amplitude ratio between the two tag channels is assumed: $\rho = E_\eta E_\xi = 1$. As a result Equations (9.27) and (9.28) reduce to:

$$U_R = \cos \Delta\varphi, \tag{9.34}$$

$$U_I = -\sin \Delta\varphi. \tag{9.35}$$

Again the information can immediately be recovered from U_R and U_I. Note that digital information could be transmitted by simply switching $\Delta\varphi$ between 0 ($U_R = 1$, $U_I = 0$) and $-\pi/2$ ($U_R = 0$, $U_I = 1$).

Lets now consider a situation where θ is not an *a priori* known and, possibly, variable with time. As discussed above, one can decide to encode the sensor information either in the amplitude ratio $\rho = E_\eta/E_\xi$ or in the phase difference $\Delta\varphi$ of the tag. The third case refers to the amplitude encoding mechanism. To this purpose $\Delta\varphi \neq 0$ because two quantities (i.e. ρ and θ) now have to be extracted from the two measured quantities (i.e. U_R and U_I). Thus, in the third application case, $\Delta\varphi = -\pi/2$ is considered. As a results one obtains:

$$U_R = \frac{(1-\rho^2)\sin(2\theta)}{(1+\rho^2)-(1-\rho^2)\cos(2\theta)}, \tag{9.36}$$

$$U_I = \frac{2\rho}{(1+\rho^2)-(1-\rho^2)\cos(2\theta)}. \tag{9.37}$$

The previous equations are reported in Figure 9.11 as a function of the rotation angle θ and for ρ equal to 0.3, 0.5, and 0.7. At this point it is interesting to note that the proposed reader–tag system can also be used as a wireless rotation sensor. In such a situation the only information is the angle θ, so it is sufficient to set ρ at a fixed value, for example $\rho = 0.5$.

Finally, in the fourth application case, the information is encoded in the phase difference $\Delta\varphi$, from where it is extracted from the measured quantities along with the orientation angle θ. If $\rho = E_\eta/E_\xi = 1$, Equations (9.27) and (9.28) become:

$$U_R = \frac{\cos\Delta\varphi\cos(2\theta)}{1+\cos\Delta\varphi\sin(2\theta)}, \tag{9.38}$$

$$U_I = \frac{-\sin\Delta\varphi}{1+\cos\Delta\varphi\sin(2\theta)}. \tag{9.39}$$

The function U_R is singular whenever its denominator is equal to zero. This occurs for particular values of the phase $\Delta\varphi$ (i.e. of the phase encoding the sensor information) and of the rotation angle θ. The critical angles can easily be computed and are reported

Downloaded from https://www.cambridge.org/core. Columbia University Libraries, on 16 Aug 2017 at 14:01:41, subject to the Cambridge Core terms of use, available at https://www.cambridge.org/core/terms. https://doi.org/10.1017/CBO9781139343459.010

Table 9.1 Critical angles.

$\Delta\varphi$	θ
$0, 2\pi \ldots$	$\frac{3}{4}\pi, \frac{7}{4}\pi \ldots$
$\pi, 3\pi \ldots$	$\frac{1}{4}\pi, \frac{5}{4}\pi \ldots$

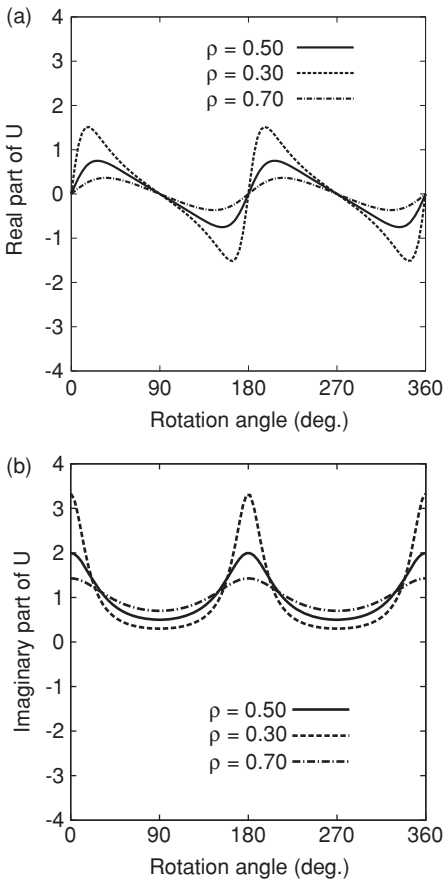

Figure 9.11 (a) Real U_R, and (b) imaginary U_I parts of the U function versus the rotation angle θ. The function is drawn in the particular case $\Delta\phi = -\pi/2$ and for three values of $\rho = E_\eta/E_\xi$. Such a parameter has been assumed to be in the range between 0.3 to 0.7 to avoid singularities when ρ approaches zero (after [63]).

in Table 9.1. The function U_I, instead, is never singular since, for $\Delta\varphi = n\pi$ with n integer, its numerator is always zero. Nevertheless, for $\Delta\varphi$ close to the critical angles of Table 9.1, the U_I values can also be very high.

The singularity problem occurs for those values of $\Delta\varphi$ producing a purely linear wave polarization. Such a problem can always be solved in the following way. When a high value of U_R is detected, the ratio between $(i_y + \mathrm{j}q_y)$ and $(i_x + \mathrm{j}q_x)$ is evaluated instead of Equation (9.26). Alternatively, the critical values of $\Delta\varphi$ can be avoided, by conditioning

Downloaded from https://www.cambridge.org/core. Columbia University Libraries, on 16 Aug 2017 at 14:01:41, subject to the Cambridge Core terms of use, available at https://www.cambridge.org/core/terms. https://doi.org/10.1017/CBO9781139343459.010

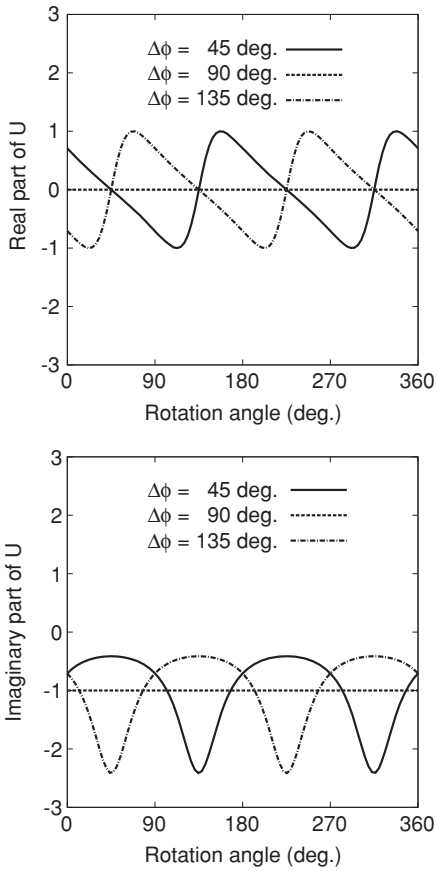

Figure 9.12 Real U_R and imaginary U_I parts of the U function versus the rotation angle θ. The function is drawn for the particular case $\rho = E_\eta / E_\xi = 1$ and for three values of $\Delta\phi$. Such a parameter has been assumed to be in the range between 45 to 135 degrees to avoid singularities.

the modulating signal. The latter approach is illustrated in Figure 9.12, where U_R and U_I are drawn versus the rotation angle θ and for $\Delta\varphi$ in the 45 to 135 degrees range. It is interesting to note that $\Delta\varphi = 90$ degrees implies a purely circular polarization and thus both U_R and U_I are independent of the rotation angle.

9.9 Conclusions

In this chapter the basic technologies for chipless RFID tags were reviewed. Then a novel zero-power wireless sensor was conceived. The sensor is based on harmonic generation and orthogonally polarized waves. The information is encoded in the phase difference or in the amplitude imbalance between two signals that are transmitted in orthogonal polarization. The mathematical development shows that the rotation angle between the sensor and the reader can also be retrieved on the basis of measurable data. Although the developed theory is absolutely general, practical applications could appropriately be targeted in the UHF frequency range ($f_0 = 960$ MHz and $2\,f_0 = 1920$ MHz) or in the

Downloaded from https://www.cambridge.org/core. Columbia University Libraries, on 16 Aug 2017 at 14:01:41, subject to the Cambridge Core terms of use, available at https://www.cambridge.org/core/terms. https://doi.org/10.1017/CBO9781139343459.010

WLAN band ($f_0 = 2.45$ GHz and $2\,f_0 = 4.90$ GHz). The results obtained demonstrate the feasibility of the proposed zero-power chipless sensor tag and of the corresponding reader electronics.

References

[1] C. Sauer, M. Stanacevic, G. Cauwenberghs, and N. Thakor, "Power harvesting and telemetry in CMOS for implanted devices," *IEEE Trans. on Circuits and Systems I*, **52**, (*12*), 2605–2613, 2005.

[2] K. Opasjumruskit, T. Thanthipwan, O. Sathusen, *et al.*, "Self-powered wireless temperature sensors exploit RFID technology," *IEEE Pervasive Computing*, **5**, (*1*), 54–61, 2006.

[3] H. M. Lu, C. Goldsmith, L. Cauller, and J.-B. Lee, "MEMS-based inductively coupled RFID transponders for implantable wireless sensor applications," *IEEE Trans. on Magnetics*, **43**, (*6*), 2412–2414, 2007.

[4] C. Occhiuzzi and G. Marrocco, "The RFID technology for neurosciences: Feasibility of limbs' monitoring in sleep diseases," *IEEE Trans. on Information Technology in Biomedicine*, **14**, (*1*), 37–43, 2010.

[5] A. Vaz, A. Ubarretxena, I. Zalbide, *et al.*, "Full passive UHF tag with a temperature sensor suitable for human body temperature monitoring," *IEEE Trans. on Circuits and Systems II: Express Briefs*, **57**, (*2*), 95–99, 2010.

[6] S. R. Munnangi, G. Haobijam, M. Kothamasu, R. Paily, and R. S. Kshetrimayum, "CMOS capacitive pressure sensor design and integration with RFID tag for biomedical applications," in *TENCON 2008*, Hyderabad, pp. 1–6, Nov. 2008.

[7] B. Todd, M. Phillips, S. M. Schultz, *et al.*, "Low-cost RFID threshold shock sensors," *IEEE, Sensors Journal*, **9**, (*4*), 464–469, 2009.

[8] B. Todd, M. Phillips, S. M. Schultz, *et al.*, "RFID threshold accelerometer," *AUTOTESTCON, IEEE*, pp. 55–59, 811, Sept. 2008.

[9] A. Sample, D. Yeager, P. Powledge, A. Mamishev, and J. Smith, "Design of an RFID-based battery-free programmable sensing platform," *IEEE Trans. on Instrumentation and Measurement*, **57**, (*11*), 2608–2615, 2008.

[10] R. Bhattacharyya, C. Floerkemeier, and S. Sarma, "Low-cost, ubiquitous RFID-tag-antenna-based sensing," *Proceedings of the IEEE*, **98**, (*9*), 1593–1600, 2010.

[11] M. Kim, K. Kim, and N. Chong, "RFID based collision-free robot docking in cluttered environment," *Progress In Electromagnetics Research*, **110**, 199–218, 2010.

[12] K. Finkenzeller, *RFID Handbook: Fundamentals and Applications in Contactless Smart Cards and Identifcation*, John Wiley & Sons, Inc., 2003.

[13] J. Hagerty, F. Helmbrecht, W. McCalpin, R. Zane, and Z. Popovic, "Recycling ambient microwave energy with broad-band rectenna arrays," *IEEE Trans. on Microwave Theory and Techniques*, **52**, (*3*), 1014–1024, 2004.

[14] A. Costanzo, A. Romani, D. Masotti, N. Abizzani, and V. Rizzoli, "RF/baseband co-design of switching receivers for multiband microwave energy harvesting," *Sensors and Actuators A: Physical*, **179**, 158–168, (Jun.) 2012.

[15] E. Cantatore, T. Geuns, G. Gelinck, *et al.*, "A 13.56 MHz RFID system based on organic transponders," *IEEE Journal of Solid State Circuits*, **42**, (*1*), 84–92, 2007.

[16] V. Subramanian, J. Frechet, P. Chang, *et al.*, "Progress toward development of all-printed RFID tags: Materials, processes, and devices," *Proceedings of the IEEE*, **93**, (*7*), 1330–1338, 2005.

Downloaded from https://www.cambridge.org/core. Columbia University Libraries, on 16 Aug 2017 at 14:01:41, subject to the Cambridge Core terms of use, available at https://www.cambridge.org/core/terms. https://doi.org/10.1017/CBO9781139343459.010

[17] S. Steudel, K. Myny, V. Arkhipov, *et al.*, "50 MHz rectifier based on an organic diode," *Nature Materials*, **4**, 597–600, (Aug.) 2005.

[18] E. Fortunato, N. Correia, P. Barquinha, *et al.*, "High-performance flexible hybrid field-effect transistors based on cellulose fiber paper," *IEEE Electron Device Letters*, **29**, (*9*), 988–990, 2008.

[19] T. Sekitani, Y. Noguchi, U. Zschieschang, H. Klauk, and T. Someya, "Organic transistors manufactured using inkjet technology with sub-femtoliter accuracy," *Proceedings of the National Academy of Sciences of the USA*, **105**, (*13*), 4976–4980, (Apr.) 2008.

[20] M. Cardinali, L. Valentini, J. Kenny, and I. Mutlay, "Graphene based composites prepared through exfoliation of graphite platelets in methyl methacrylate/poly(methyl methacrylate)," *Polymer International*, **61**, (*7*), 1079–1083, 2012.

[21] A. Loi, L. Basirico, P. Cosseddu, *et al.*, "Organic bendable and stretchable field effect devices for sensing applications," *IEEE Sensors Journal*, **13**, (*12*), 4764–4772, 2013.

[22] F. Arca, M. Sramek, S. F. Tedde, P. Lugli, and O. Hayeden, "Near-infrared organic photodiodes," *IEEE Journal of Quantum Electronics*, **49**, (*12*), 1016–1025, 2013.

[23] P. Cosseddu, S. Lai, M. Barbaro, and A. Bonfiglio, "Ultra-low voltage, organic thin film transistors fabricated on plastic substrates by a highly reproducible process," *Appl. Phys. Lett.*, **100**, (*9*), 093 305–093 305–5, (Feb.) 2012.

[24] L. Yang, A. Rida, R. Vyas, and M. Tentzeris, "RFID tag and RF structures on a paper substrate using inkjet-printing technology," *IEEE Trans. on Microwave Theory and Techniques*, **55**, (*12*), 2894–2901, 2007.

[25] L. Yang, L. J. Martin, D. Staiculescu, C. P. Wong, and M. Tentzeris, "Conformal magnetic composite RFID for wearable RF and biomonitoring applications," *IEEE Trans. on Microwave Theory and Techniques*, **56**, (*12*), 3223–3230, 2008.

[26] V. Lakafosis, A. Rida, R. Vyas, *et al.*, "Towards the first wireless sensor networks consisting of inkjet-printed, paper-based RFID-enabled sensor tags," *Proceedings of the IEEE*, **98**, (*9*), 1601–1609, 2010.

[27] G. Orecchini, V. Palazzari, A. Rida, *et al.*, "Design and fabrication of ultra-low cost radio frequency identification antennas and tags exploiting paper substrates and inkjet printing technology," *IET Microwave Antennas & Propagation*, **5**, (*8*), 993–1001, (Jun.) 2011.

[28] M. Nelo, A. Sowpati, V. Palukuru, J. Juuti, and H. Jantunen, "Utilization of screen printed low curing temperature cobalt nanoparticle ink for miniaturization of patch antennas," *Progress In Electromagnetics Research*, **127**, 427–444, 2012.

[29] L. Basirico, P. Cosseddu, A. Scida, *et al.*, "Electrical characteristics of ink-jet printed, all-polymer electrochemical transistors," *Organic Electronics*, **13**, (*2*), 244–248, 2012.

[30] Stevan Preradovic and Nemai Karmakar, "Fully printable chipless RFID tag," in *Advanced Radio Frequency Identification Design and Applications,* Dr Stevan Preradovic (Ed.), ISBN: 978953–307–168–8, 2011, InTech, DOI: 10.5772/14555. Available from: http://www.intechopen.com/books/advanced-radio-frequency-identification-design-and-applications/fully-printable-chipless-rfid-tag.

[31] X. Jingtian, Y. Na, C. Wenyi, *et al.*, "Low-cost low-power UHF RFID tag with on-chip antenna," *Journal of Semiconductors*, **30**, (*7*), 075 012/1–075 012/6, 2009.

[32] M. Law, A. Bermak, and H. Luong, "A sub-μW embedded CMOS temperature sensor for RFID food monitoring application," *IEEE Journal of Solid-State Circuits*, **45**, (*6*), 1246–1255, 2010.

[33] *Alien Technology Corporation White Paper: Fluidic Self Assembly*, Alien Technology, 1999. [Online], available: http://www.alientechnology.com.

Downloaded from https://www.cambridge.org/core. Columbia University Libraries, on 16 Aug 2017 at 14:01:41, subject to the Cambridge Core terms of use, available at https://www.cambridge.org/core/terms. https://doi.org/10.1017/CBO9781139343459.010

[34] F. Alimenti, M. Virili, G. Orecchini, *et al.*, "A new contactless assembly method for paper substrate antennas and UHF RFID chips," *IEEE Trans. on Microwave Theory and Techniques*, **59**, (*3*), 627–637, 2011.

[35] C. Hertleer, H. Rogier, L. Vallozzi, and L. V. Langenhove, "A textile antenna for off-body communication integrated into protective clothing for firefighters," *IEEE Trans. on Antennas and Propagation*, **57**, (*4*), 919–925, 2009.

[36] X. Li, J. Liao, Y. Yuan, and D. Yu, "Eye-shaped segmented reader antenna for near-field UHF RFID applications," *Progress In Electromagnetics Research*, **114**, 481–493, 2011.

[37] J.-J. Tiang, M. Islam, N. Misran, and J. S. Mandeep, "Circular microstrip slot antenna for dual-frequency RFID application," *Progress In Electromagnetics Research*, **120**, 499–512, 2011.

[38] Y. Amin, Q. Chen, H. Tenhunen, and L.-R. Zheng, "Performance-optimized quadrate bowtie RFID antennas for cost-effective and eco-friendly industrial applications," *Progress In Electromagnetics Research*, **126**, 49–64, 2012.

[39] Y. Amin, Q. Chen, L.-R. Zheng, and H. Tenhunen, "Development and analysis of flexible UHF RFID antennas for 'green' electronics," *Progress In Electromagnetics Research*, **130**, 1–15, 2012.

[40] F. Viani, M. Salucci, G. Olivieri, F. Robol, and A. Massa, "Design of UHF RFID/GPS fractal antenna for logistic management," *Journal of Electromagnetic Waves and Applications*, **26**, (*4*), 480–492, 2012.

[41] S. Tedjini, N. Karmakar, E. Perret, *et al.*, "Hold the chips: Chipless technology, an alternative technique for RFID," *IEEE Microwave Magazine*, **14**, (*5*), 56–65, (Aug.) 2013.

[42] S. Preradovic and N. C. Karmakar, "Chipless RFID: Bar code of the future," *IEEE Microwave Magazine*, **11**, (*7*), 87–97, (Dec.) 2010.

[43] F. Alimenti, P. Mezzanotte, M. Dionigi, M. Virili, and L. Roselli, "Microwave circuits in paper substrates exploiting conductive adhesive tapes," *IEEE Microwave and Wireless Components Letters*, **22**, (*12*), 660–662, 2012.

[44] C. Jones, "Invisible tattoo ink for chipless RFID safe, company says," *EE Times White Paper (Online)*, available: http://eetimes.eu/industrial/196900063 June, 2009.

[45] J. Collins, "RFID fibers for secure applications," *RFID Journal (Online),* available: http://www.rfidjournal.com/article/articleprint/845/-1/1/April, 2006.

[46] J. McVay, A. Hoorfar, and N. Engherta, "Space-filling curve RFID tags," *IEEE Radio and Wireless Symp. Dig*, San Diego, pp. 199–202, 17–19 Jan. 2006.

[47] Tagsense, Inc., "Chipless RFID products. Data Sheet" available: http://www.tagsense.com/ingles/products/product_chipless.html, Oct. 2006.

[48] S. Preradovic, I. Balbin, N. C. Karmakar, and G. Swiegers, "A novel chip-less RFID system based on planar multiresonators for barcode replacement," *IEEE International Conference on RFID*, pp. 289–296, 16–17 April 2008.

[49] I. Balbin and N. Karmakar, "Novel chipless RFID tag for conveyor belt tracking using multi-resonant dipole antenna," *IEEE Microwave Conference, EuMC 2009 European*, pp. 1109–1112, 29 Sept.–1 Oct. 2009.

[50] R. Vyas, V. Lakafosis, Lee Hoseon, *et al.*, "Inkjet printed, self powered, wireless sensors for environmental, gas, and authentication-based sensing," *IEEE Sensors Journal*, **11**, (*12*), 3139–3152, 2011.

[51] C. Mandel, M. Schussler, M. Maasch, and R. Jakoby, "A novel passive phase modulator based on LH delay lines for chipless microwave RFID applications," in *IEEE MTT-S*

Downloaded from https://www.cambridge.org/core. Columbia University Libraries, on 16 Aug 2017 at 14:01:41, subject to the Cambridge Core terms of use, available at https://www.cambridge.org/core/terms. https://doi.org/10.1017/CBO9781139343459.010

International Microwave Workshop on Wireless Sensing, Local Positioning, and RFID, IMWS 2009, pp. 1–4, 24–25 Sept. 2009.

[52] I. Balbin and N. C. Karmakar, "Phase-encoded chipless RFID transponder for large-scale low-cost applications," *IEEE Microwave and Wireless Components Letters*, **19**, (*8*), 509–511, 2009.

[53] S. Mukherjee, "Chipless radio frequency identification by remote measurement of complex impedance," *European Microwave Conference*, pp. 1007–1010, 9–12 Oct. 2007.

[54] G. Orecchini, L. Yang, A. Rida, *et al*., "Green technologies and RFID: Present and future," *Applied Comput. Electromagnetics Society Journal*, **25**, (*3*), 230–238, 2010.

[55] S. Steudel, S. D. Vusser, K. Myny, *et al*., "Comparison of organic diode structures regarding high-frequency rectification behavior in radio-frequency identification tags," *J Appl. Phys.*, **99**, (*11*), 114519, (Jun.) 2006.

[56] L. Valentini and J. Kenny, "Novel approaches to developing carbon nanotube based polymer composites: Fundamental studies and nanotech applications," *Polymer*, **46**, (*17*), 6715–6718, (Aug.) 2005.

[57] V. Marinov, Y. Atanasov, A. Khan, *et al*., "Direct-write vapor sensors on FR4 plastic substrates," *IEEE Sensor Journal*, **7**, (*6*), 937–944, 2007.

[58] T. Unander and H.-E. Nilsson, "Characterization of printed moisture sensors in packaging surveillance applications," *IEEE Sensor Journal*, **9**, (*8*), 922–928, 2009.

[59] S. Couderc, B. Kim, and T. Someya, "Cellulose-based composite as a raw material for flexible and ultra-lightweight mechanical switch devices," in *IEEE 22nd International Conference on Micro Electro Mechanical Systems*, Sorrento (Italy), pp. 646–649, Jan. 2009.

[60] M. Bozzi, A. Georgiadis, and K. Wu, "Review of substrate-integrated waveguide circuits and antennas," *IET Microwaves, Antennas & Propagation*, **5**, (*8*), 909–920, (Jun.) 2011.

[61] F. Alimenti, P. Mezzanotte, L. Roselli, and R. Sorrentino, "A revised formulation of modal absorbing and matched modal source boundary conditions for the efficient FDTD analysis of waveguide structures," *IEEE Trans. on Microwave Theory and Techniques*, **48**, (*1*), 50–59, 2000.

[62] F. Alimenti, P. Mezzanotte, G. Tasselli, *et al*., "Development of low-cost 24-GHz circuits exploiting system-in-package (SiP) approach on commercial PCB technology," *IEEE Trans. on Components, Packaging and Manufacturing Technology*, **2**, (*8*), 1265–1274, 2012.

[63] F. Alimenti and L. Roselli, "Theory of zero-power RFID sensors based on harmonic generation and orthogonally polarized antennas," *Progress in Electromagnetic Research*, **134**, 337–357, 2013.

[64] B. Colpitts and G. Boiteau, "Harmonic radar transceiver design: Miniature tags for insect tracking," *IEEE Trans. on Antennas and Propagation*, **52**, (*11*), 2825–2832, 2004.

[65] W.-H. Tu, M.-Y. Li, and K. Chang, "Broadband microstrip-coplanar stripline-fed circularly polarized spiral antenna," in *IEEE International Antennas and Propagation Symposium Digest*, Albuquerque (USA), pp. 3669–3672, Oct. 2006.

[66] S. Maas, *Nonlinear Microwave and RF Circuits*, 2nd Edn. Artech-House, Inc., 2003.

[67] G. Monti, R. D. Paolis, and L. Tarricone, "Design of a 3-state reconfigurable CRLH transmission line based on MEMS switches," *Progress In Electromagnetics Research*, **95**, 283–297, 2009.

[68] J.-J. Lyu and T.-L. Chen, "Optimize a RFID-based turbine maintenance model – a preliminary study," in *IEEE International Conference on Industrial Engineering and Engineering Management*, Singapore, pp. 501–505, Nov. 2008.

[69] R. Collin, *Antennas and Radiowave Propagation*, McGraw-Hill, 1985.

Downloaded from https://www.cambridge.org/core. Columbia University Libraries, on 16 Aug 2017 at 14:01:41, subject to the Cambridge Core terms of use, available at https://www.cambridge.org/core/terms. https://doi.org/10.1017/CBO9781139343459.010